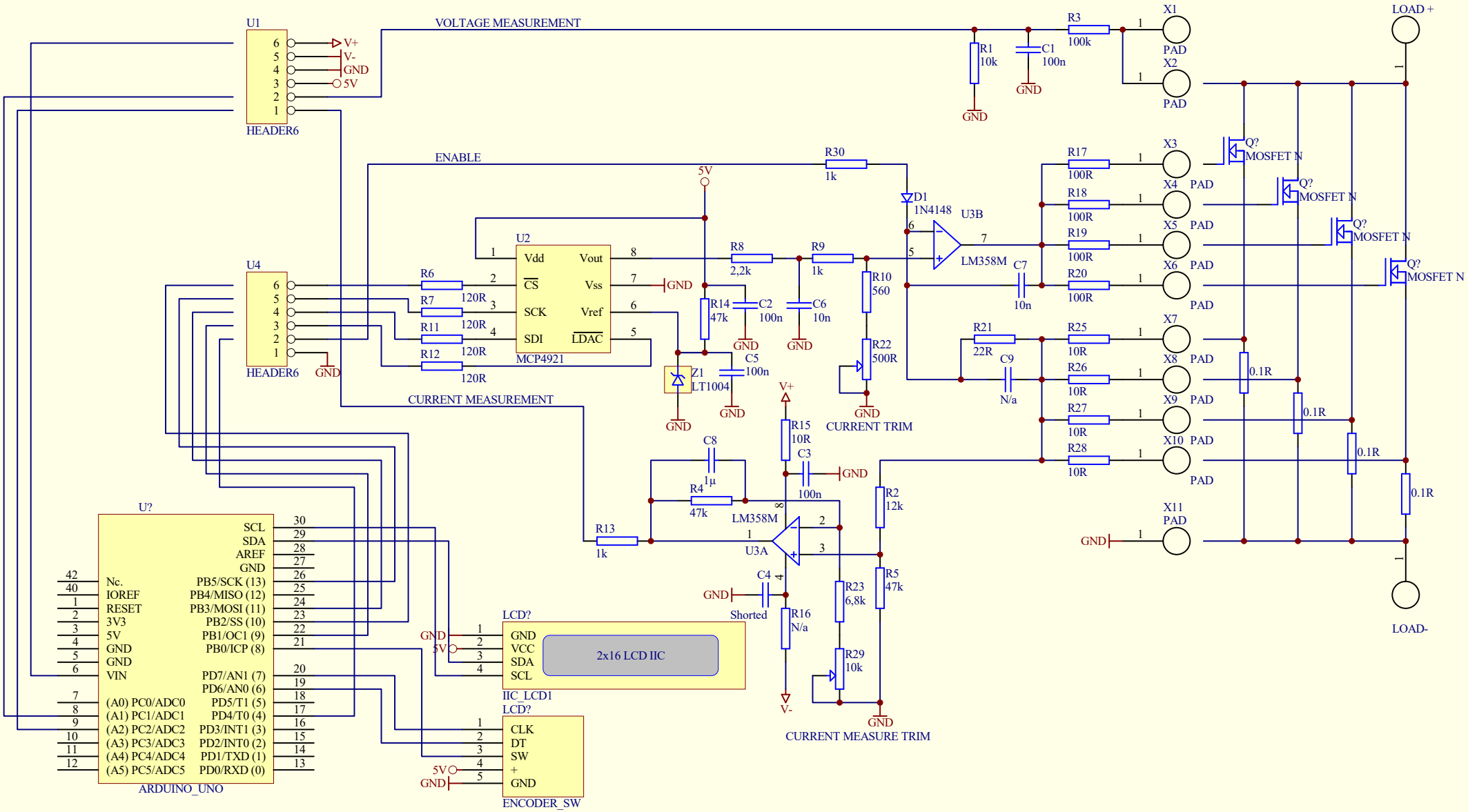
U1
HEADER6
V+
V-
GND
5V
VOLTAGE MEASUREMENT
R1
10k
C1
100n
R3
100k
X1
PAD
X2
PAD
LOAD +
LOAD-
ENABLE
R30
1k
D1
1N4148
U3B
LM358M
C7
10n
R17
100R
R18
100R
R19
100R
R20
100R
X3
X4
X5
X6
X7
X8
X9
X10
X11
Q?
MOSFET N
U4
HEADER6
R6
R7
R11
R12
120R
U2
MCP4921
Vdd
Vout
CS
Vss
SCK
Vref
SDI
LDAC
R8
2,2k
R9
1k
R10
560
R14
47k
C2
100n
C6
10n
C5
100n
Z1
LT1004
R22
500R
CURRENT TRIM
R21
22R
C9
N/a
R25
10R
R26
10R
R27
10R
R28
10R
0.1R
CURRENT MEASUREMENT
R15
10R
C3
100n
C8
1µ
R4
47k
LM358M
U3A
R13
1k
R2
12k
R5
47k
C4
Shorted
R16
N/a
R23
6,8k
R29
10k
CURRENT MEASURE TRIM
U?
ARDUINO_UNO
SCL
SDA
AREF
GND
Nc.
IOREF
RESET
3V3
5V
GND
GND
VIN
(A0) PC0/ADC0
(A1) PC1/ADC1
(A2) PC2/ADC2
(A3) PC3/ADC3
(A4) PC4/ADC4
(A5) PC5/ADC5
PB5/SCK (13)
PB4/MISO (12)
PB3/MOSI (11)
PB2/SS (10)
PB1/OC1 (9)
PB0/ICP (8)
PD7/AN1 (7)
PD6/AN0 (6)
PD5/T1 (5)
PD4/T0 (4)
PD3/INT1 (3)
PD2/INT0 (2)
PD1/TXD (1)
PD0/RXD (0)
LCD?
GND
VCC
SDA
SCL
2x16 LCD IIC
IIC_LCD1
LCD?
CLK
DT
SW
+
GND
ENCODER_SW